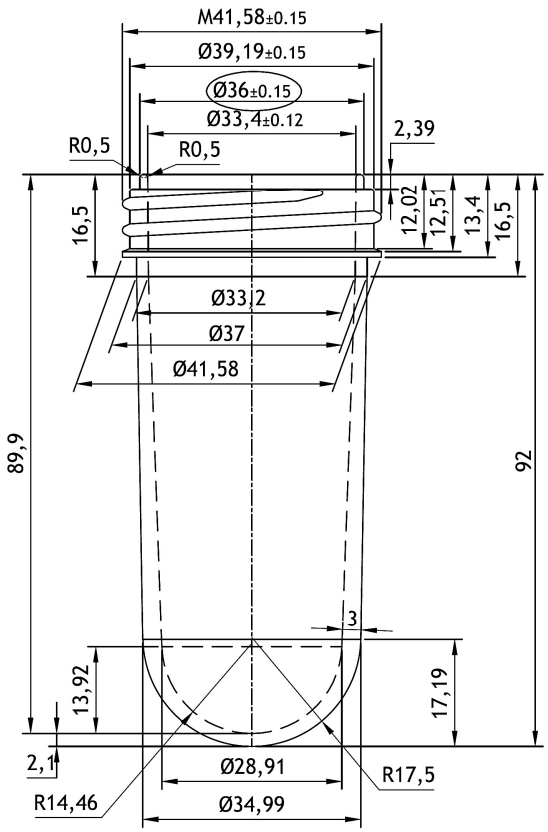

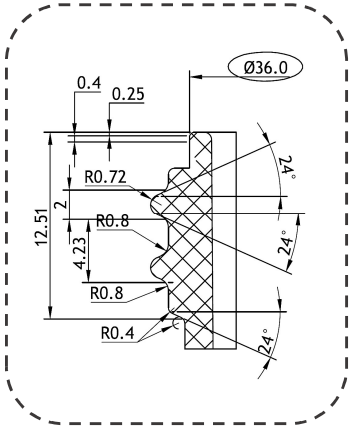

This document in design and detail is the property of SIA Trypet and is not to be used or reproduced by unauthorized persons.

Confirmed by:	Name/Signature	Date
Project Manager	Vadim Fedyanin	08/09/2022
Quality Assurance	Angelina Miškina	

Article Description	38 mm 1-start Preform, 31.50 g
Trypet Article No.	38.1START.P31.50
Project Reference	P2021-004.1START38.Grinder Neck Bottle (Bruni)
Drawing Ref.& Date	38.1START.P32.2021.03.26.V2
Neck finish	38 mm 1-start “glass conversion” thread type, pitch = 4.23 mm, 1 ½ turn.

Properties	Value	Tolerance
Weight	31.50 g	±0.50 g
Height	92.00 mm	±0.50 mm
E dia	36.00 mm	±0.15 mm
T dia	41.58 mm	±0.15 mm
I dia	33.40 mm	±0.12 mm